Partnership. With Guarantee.

# Knife gate valve with handwheel
# Series A1V2





| | |
|---|---|
| Design type | Knife gate valve with handwheel, Sandwich mounting version, single-acting sealing, rising stem, Manually adjustable packing |
| Actuation | by means of handwheel |
| Connection | Flanges DN50...DN500 according to EN1092-2 PN10 |
| Materials | see material table |
| Medium temperature | Housing Grey cast iron EN-GJL-250 or rather Ductile iron EN-GJS-500-7 -10...120°C, Housing Stainless steel 1.4408 -30...120°C, additionally also dependent on the packing and sealing material - see table, higher temperatures on request |
| Operating pressure | up to nominal pressure according to table<br>ATTENTION: Spool can be pressurized against the flow direction with 30% of the maximum operating pressure. This may result in slight leakage in the closed position. |
| Flow direction | Marked by an arrow. For dry media we recommend a flow opposite to the arrow direction.<br>ATTENTION: Spool can be pressurized against the flow direction with 30% of the maximum operating pressure. This may result in slight leakage in the closed position. |
| Mounting type | Installation in rigid piping system |
| Mounting position | vertically upwards, other mounting position on request |
| Accessories | mounted mechanical limit switches or rather inductive proximity switches |
| ATEX | suitable for use in potentially explosive atmospheres Zone 2 and 22 (ATEX Zone 1 and 21 on request) |
| Special versions | Nominal sizes up to 1200mm, non-rising stem, single-acting or double-acting pneumatic actuator, Electric actuator, Sliding discs slide plate PTFE, Flushing bores, other nominal pressures on request |



+43 512 52076
austria@stasto.eu
© STASTO Automation KG

## Material table:

| Type | A1V2H2-5-...-B | A1V2I2-5-... |
|---|---|---|
| Housing | Grey cast iron EN-GJL-250 or rather Ductile iron EN-GJS-500-7<br>epoxy coated RAL5015, Coating 80µm | Stainless steel 1.4408 |
| Slide plate | Stainless steel AISI 304 | Stainless steel 1.4401 |
| Connection plates | Steel coated | Steel coated |
| Pack (standard) | PTFE-synthetic/EPDM | PTFE-synthetic/EPDM |
| Seat seal (standard) | EPDM | EPDM |
| Sliding discs slide plate | RCH-1000(Polyethylene) | RCH-1000(Polyethylene) |
| Spindle | Stainless steel 1.4305 | Stainless steel 1.4305 |
| Handwheel | Ductile iron EN-GJS-500-7 | Ductile iron EN-GJS-500-7 |

## Seat variants single-sided sealing:

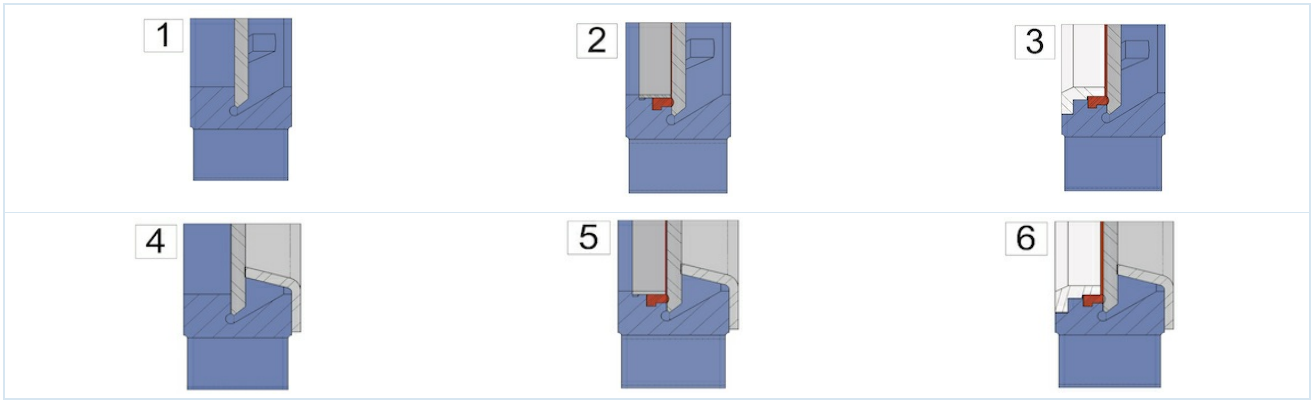


| | | |
|---|---|---|
| 1 ...metal-to-metal sealing | 2 ...soft-sealing with fixing ring (Standard) | 3 ...soft-sealing with reinforced retaining ring or rather Wiper for slide plate |
| 4 ...metal-seated with abrasion protection | 5 ...soft-sealing with retaining ring and abrasion protection | 6 ...soft-sealing with reinforced retaining ring or rather Wiper for slide plate and abrasion protection |

## Possible packages:

| Package | Medium temperature [°C] | Application examples |
|---|---|---|
| PTFE-synthetic/EPDM | -15 ...+90 | neutral fluids, Liquids with 5% solid content, Granules, Slurries |
| PTFE-synthetic/FKM | -15 ...+180 | Liquids, Liquids with 5% solid content, Granules, Slurries |
| PTFE | -30 ...+200 | for almost all liquids |

## Possible seat seals:

| Seal | Medium temperature [°C] | Leakage [in % of the flow rate] | Application examples |
|---|---|---|---|
| EPDM | -5...+90 | 0 | neutral fluids, Liquids with 5% solid content, Granules, Slurries |
| metallic | -20...+650 | 1,5 | dry media and liquids with 5% solid content, Granules, Slurries |
| PTFE | -20 ...+180 | 0,5 | Alkalis and acids |
| FKM | 0...+180 | 0 | Acids, Fuels and oil-containing liquids |
| NBR | -20...+90 | 0 | Oils and oil-containing fluids |
| Silicone | -25...+200 | 0 | Food and pharmaceutical products |


+43 512 52076
austria@stasto.eu
© STASTO Automation KG

## Dimensions:

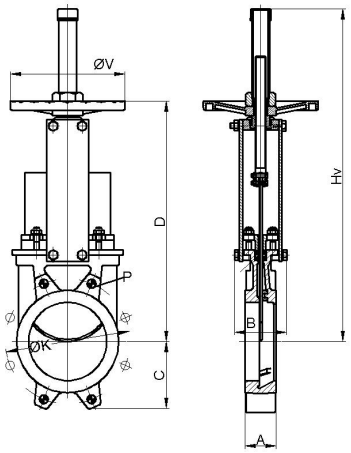


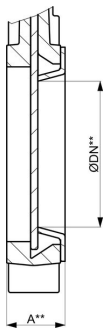


incl. Abrasion protection

| Nominal size DN[mm] | ØDN** | max. operating pressure [bar] | A | A** | B | C | D | Hv | ØK | Depth* P | ØV | Kv value [m 3 /h] | Kv value*** [m 3 /h] | Weight [kg] |
|---|---|---|---|---|---|---|---|---|---|---|---|---|---|---|
| 50 | 25 | 10 | 40 | 46 | 92 | 63 | 280 | 409 | 125 | 8 | 225 | 206 | 28 | 7 |
| 65 | 39 | 10 | 40 | 46 | 92 | 70 | 308 | 436 | 145 | 8 | 225 | 305 | 72 | 8 |
| 80 | 52 | 10 | 50 | 56 | 92 | 92 | 333 | 469 | 160 | 9 | 225 | 485 | 137 | 9 |
| 100 | 72 | 10 | 50 | 56 | 92 | 105 | 373 | 502 | 180 | 9 | 225 | 895 | 279 | 11 |
| 125 | 97 | 10 | 50 | 56 | 102 | 120 | 406 | 585 | 210 | 9 | 225 | 1550 | 548 | 13 |
| 150 | 119 | 10 | 60 | 66 | 102 | 130 | 458 | 644 | 240 | 10 | 225 | 2095 | 851 | 17 |
| 200 | 167 | 10 | 60 | 66 | 119 | 160 | 578 | 815 | 295 | 10 | 325 | 3834 | 1888 | 28 |
| 250 | 217 | 10 | 70 | 77 | 119 | 198 | 679 | 1016 | 350 | 12 | 325 | 5375 | 3400 | 40 |
| 300 | 259 | 6 | 70 | 77 | 119 | 234 | 779 | 1116 | 400 | 12 | 380 | 8083 | 4845 | 56 |
| 350 | 302 | 6 | 96 | 105 | 290 | 256 | 906 | 1336 | 460 | 21 | 450 | 10700 | 6808 | 94 |
| 400 | 352 | 6 | 100 | 109 | 290 | 292 | 1012 | 1442 | 515 | 21 | 450 | 14200 | 9746 | 116 |
| 450 | 400 | 5 | 106 | 115 | 290 | 308 | 1098 | 1628 | 565 | 22 | 450 | 18405 | 12442 | 162 |
| 500 | 449 | 4 | 110 | 119 | 290 | 340S | 1210 | 1738 | 620 | 22 | 450 | 23215 | 15979 | 191 |

*Thread depth, DN600 ...DN1200 on request
***Kv value incl. Abrasion protection

## Limit switch

| Type | MSU01A | MSU05 | MSU03 | MSU04 |
|---|---|---|---|---|
| | 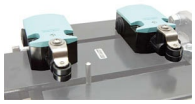 |  |  |  |
| Manufacturer/type | Siemens 3SE5122 | IFM IG0011 | IFM IGS208 | IFM NG501A |
| Description | N/O / N/C | M18, 20-250VAC/DC, NO, 2-wire, Cable 2m | M18, 10-30VDC, NO, 2-wire or 3-wire, Cable 2m | M18, ATEX EEx i, Cable 2m |
| Ambient temperature | -25 ...+85°C | -25 ...+80°C | -25 ...+70°C | -20 ...+70°C |
| Degree of protection | IP66 | IP67 | IP67 | IP67 |
| maximum switching capacity | 230VAC/6A 24VDC/0,27A | AC 250mA, DC 100mA | DC 100mA | - |

## Flange information:

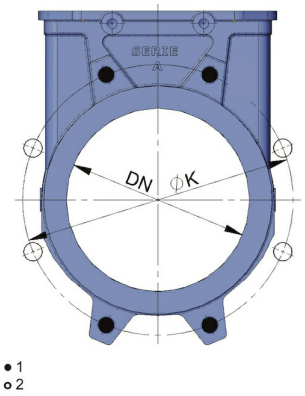


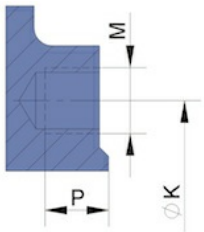


1...Blind tapped hole thread, 2...Through bore

| Nominal size DN[mm] | Number of blind tapped holes | Number of through holes | ØK | M | Depth Blind tapped hole thread P |
|---|---|---|---|---|---|
| 50 | 4 | - | 125 | M16 | 8 |
| 65 | 4 | - | 145 | M16 | 8 |
| 80 | 4 | 4 | 160 | M16 | 9 |
| 100 | 4 | 4 | 180 | M16 | 9 |
| 125 | 4 | 4 | 210 | M16 | 9 |
| 150 | 4 | 4 | 240 | M20 | 10 |
| 200 | 4 | 4 | 295 | M20 | 10 |
| 250 | 6 | 6 | 350 | M20 | 12 |
| 300 | 6 | 6 | 400 | M20 | 12 |
| 350 | 10 | 6 | 460 | M20 | 21 |
| 400 | 10 | 6 | 515 | M24 | 21 |
| 450 | 14 | 6 | 565 | M24 | 22 |
| 500 | 14 | 6 | 620 | M24 | 22 |
| DN600 ...DN1200 on request | | | | | |

Illustrations non-binding
Design, dimensional and material changes reserved




+43 512 52076
austria@stasto.eu
© STASTO Automation KG