Partnership. With Guarantee.

Steel flanged ball valves with pneumatic rotary actuator
Series BA079, Steam applications



Design type	Actuator: piston actuator with 2 opposed pistons, elastic sealing, actuator in all details in accordance with ISO 5211 or according to NAMUR recommendations, End positions adjustable on both sides +/-5°
Connection	Flanges DN15...DN100 according to EN1092-1, PN16
Materials Standard version	Actuator: Hard anodized aluminium, Pinion, nickel-plated steel, Piston guide POM, Seals NBR Ball valve: Housing steel 1.0432, Ball stainless steel AISI 304, Ball seal made of graphite-reinforced PTFE, Stem seal made of graphite-reinforced PTFE, Spindle O-ring FKM
Function	available in double-acting or single-acting Version
Mounting type	Installation in rigid piping system
Mounting position	any
Control medium	filtered and lubricated or non-lubricated compressed air
Application range	Steam, other applications on request
Medium temperature	-10...+198°C
Ambient temperature	-20...+85°C
Control pressure	5,5...8bar, Adaptation to lower pilot pressures possible on request
Operating pressure	Steam max. 15bar, other applications on request
Special version	Stainless steel pinion, ATEX, Ambient temperatures from -20°C...+150°C
Accessories	assembled manual, pneumatic or electric control valve electrical end position feedback, Positioner in I/P or P/P version Adjustment of the switching speed
Ordering note	When ordering, please also specify pilot pressure, operating medium, operating pressure and operating temperature.
Application note	When selecting the valve, the lowest control pressure occurring in the system must be taken as the basis.

+43 512 52076
austria@stasto.eu
© STASTO Automation KG

Dimensions

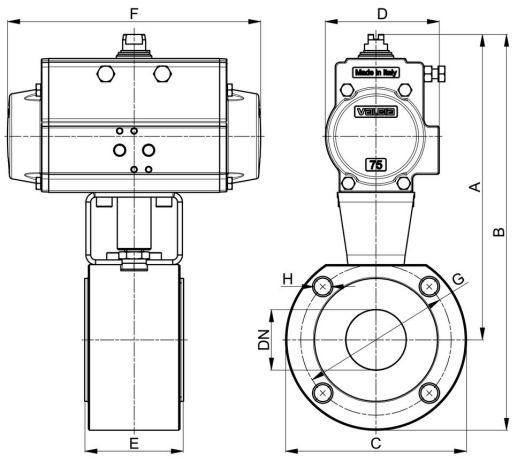

Ball valves with double-acting rotary actuator

Nominal size DN[mm]	PN [bar]	A	B	C	D	E	F	G	H	Actuator type	Kv value [m 3 /h]	Weight [approx. kg]	Type
15	15	183	228	90	71	35	141	65	4xM12	PAD052	19,2	2,8	BA079-15-D0
20	15	200	250	100	81	40	164	75	4xM12	PAD063	35,0	3,9	BA079-20-D0
25	15	207	265	115	81	46	164	85	4xM12	PAD063	64,5	4,7	BA079-25-D0
32	15	212	287	140	81	54	164	100	4xM16	PAD063	103,8	6,2	BA079-32-D0
40	15	245	320	150	95	63,5	210	110	4xM16	PAD075	174	7,5	BA079-40-D0
50	15	253	336	165	95	82	210	125	4xM16	PAD075	301,3	12,2	BA079-50-D0
65	15	285	378	185	106	103	241	145	4xM16	PAD085	547,7	20,5	BA079-65-D0
80	15	304	404	200	123	122	275	160	8xM16	PAD100	872,5	26,8	BA079-80-D0
100	15	341	451	220	123	152	275	180	8xM16	PAD100	1363,3	41,4	BA079-100-D0
125	15	398	523	250	137	196	333	210	8XM16	PAD115	2360,3	51,2	BA079-125-D0

Ball valves with single-acting rotary actuator

Nominal size DN[mm]	PN [bar]	A	B	C	D	E	F	G	H	Actuator type	Kv value [m 3 /h]	Weight [approx. kg]	Type
15	15	195	239	90	81	35	164	65	4xM12	PAS0635	19,2	3,7	BA079-15-S0
20	15	231	281	100	106	40	241	75	4xM12	PAS0855	35,0	7,1	BA079-20-S0
25	15	239	296	115	106	46	241	85	4xM12	PAS0855	64,5	7,4	BA079-25-S0
32	15	245	315	140	106	54	241	100	4XM16	PAS0855	103,8	9,4	BA079-32-S0
40	15	271	346	150	123	63,5	275	110	4xM16	PAS1005	174,0	13,5	BA079-40-S0
50	15	315	398	165	137	82	333	125	4xM16	PAS1155	301,3	20,6	BA079-50-S0
65	15	365	458	185	148	103	372	145	4xM16	PAS1255	547,5	31,3	BA079-65-S0
80	15	394	494	200	164	122	435	160	8xM16	PAS1405	872,5	36,9	BA079-80-S0
100	15	434	544	220	186	152	500	180	8xM16	PAS1605	1363,3	50,9	BA079-100-S0
125	15	434	557	250	186	196	500	210	8xM16	PAS1605	2360,3	71,9	BA079-125-S0
150	15	538	658	285	217	232	579	240	8XM20	PAS2005	3671,1	124,4	BA079-150-S0
Single-acting actuators are supplied spring-closing (NC) unless otherwise ordered.													

Illustrations non-binding
Design, dimensional and material changes reserved

+43 512 52076
austria@stasto.eu
© STASTO Automation KG