Partnership. With Guarantee.

Maintenance unit G1"
Series MU203





Design type	Diaphragm pressure regulator with secondary venting, Centrifugal force principle filter, Sintered filter element, semi-automatic drain valve, Proportional lubricator and Intrinsic air consumption of max. 0,5Nl/min
Function	Pressure regulation with filtration and enrichment of the compressed air with oil
Filter element	5µm
Connection	G1" according to ISO228/1
Materials	Housing Aluminium, Oil and condensate reservoir Polycarbonate or Metal, Seals NBR, Knob POM
Medium	Compressed air
Medium temperature	with plastic bowl 0...+60°C, with metal bowl 0...+60°C (with appropriately conditioned compressed air -10...+60°C)
Ambient temperature	with plastic bowl 0...+60°C, with metal bowl -10...+60°C
Inlet pressure	maximum 16bar, with automatic drain valve 1,5...16bar
Control ranges	0,5...10bar (0,1...3bar / 0,2...6bar / 0,5...16bar on request)
Flow direction	is marked by an arrow
Mounting type	Installation in piping system or Wall mounting using mounting bracket
Mounting position	vertical, Drain screw bottom
Locking mechanism	Pressure setting can be locked by pressing in the rotary knob
Scope of delivery	including pressure gauge
Oil recommendation	HP32A (Temperature range 0...50°C), NR32 (Temperature range -35...85°C)

+43 512 52076
austria@stasto.eu
© STASTO Automation KG

Type code

		MU203	-	10	H	-	0,5/3	-	P	-	A
Connection	1"			10							
Flow rate	high flow rate				H						
Pressure range	0,1...3bar						0,1/3				
	0,2...6bar						0,2/6				
	0,5...10bar						0,5/10				
	0,5...16bar						0,5/16				
Reservoir	Plastic reservoir (Leave blank)										
	Plastic reservoir with protective cage								P		
	Metal container								M		
Drain valve	semi-automatic drain valve (Leave blank)										
	automatic drain valve										A

Dimensional drawing, Characteristics

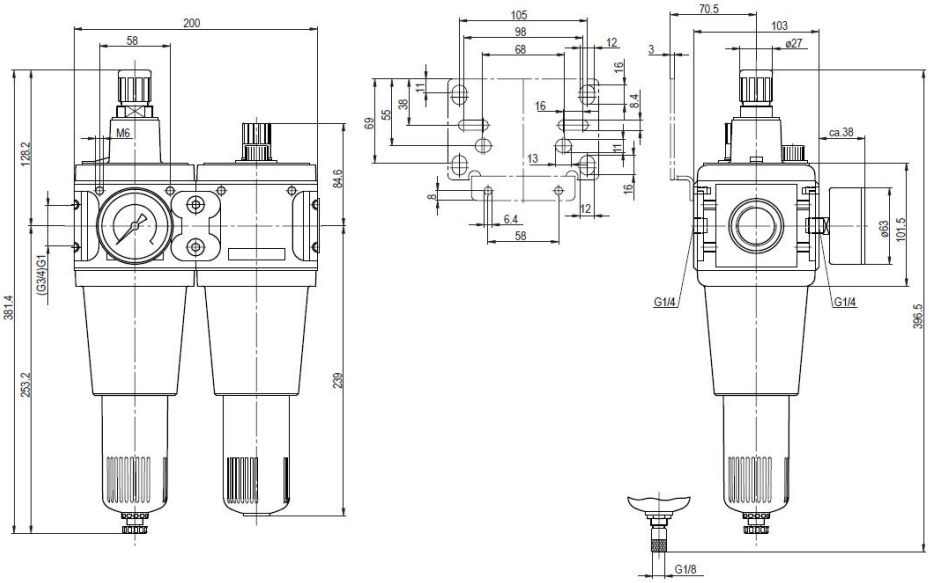

semi-automatic drain valve

automatic drain valve

Connection	Flow rate at 6 bar* [Nl/min]	max. Inlet pressure [bar]	Pressure range [bar]	Type
G1"	10500	16	0,5...10	MU203-10H-0,5/10
G1"	10500	16	0,5...10	MU203-10H-0,5/10-P
G1"	10500	16	0,5...10	MU203-10H-0,5/10-M

*Flow rate data at inlet pressure of 8bar, outlet pressure of 6bar and 1bar Pressure drop

+43 512 52076
austria@stasto.eu

© STASTO Automation KG

Flow diagram, Oiler response threshold

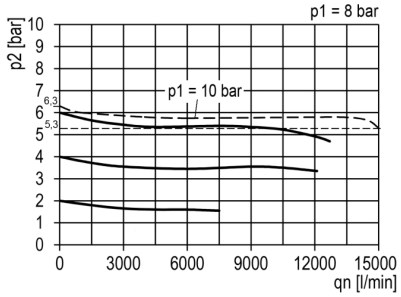

Flow diagram

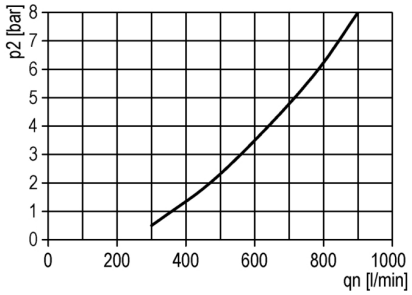

Oiler response threshold

Accessories

Designation	Type
Holding angle with 2 screws	MMB03-34VH/10H

Illustrations non-binding
Design, dimensional and material changes reserved

+43 512 52076
austria@stasto.eu
© STASTO Automation KG