Partnership. With Guarantee.

High-pressure regulator
Series PR16







Design type	Piston pressure regulator with secondary venting
Connection	G1/4"...G1" according to ISO228/1
Materials	Housing Brass, Seals NBR
Function	Secondary pressure regulation
Mounting position	any
Medium	filtered compressed air
Medium temperature	+10...+90°C
Ambient temperature	-20...+90°C
Inlet pressure	maximum 60bar
Control ranges	0,5...12/1...20/2...35/3...50bar
Flow direction	is marked by an arrow
Scope of delivery	including pressure gauge

+43 512 52076
austria@stasto.eu
© STASTO Automation KG

Dimensional drawing

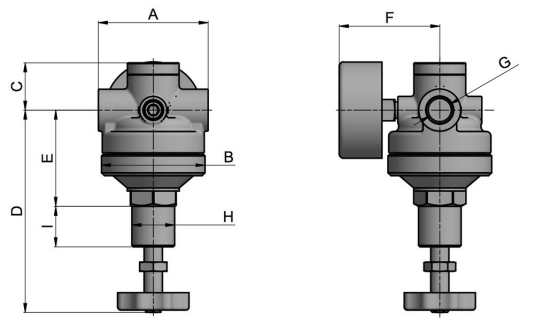

G1/4-G1/2"

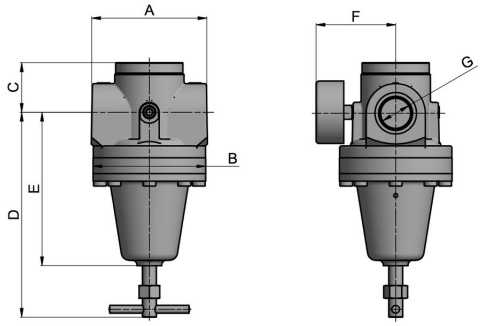

G1"

Connection G	Flow rate* [Nl/min]	A	B	C	D	E	F	H	I	Weight [kg]
G1/4"	2170	72	68	35	133	63	66	M28x1,5	26	1,5
G3/8"	2720	72	68	35	133	63	66	M28x1,5	26	1,5
G1/2"	3810	72	72	35	121	45	75	M28x1,5	31	2,0
G1"	5440	118	114	51	206	155	80	-	-	7,1

*Flow rate data at inlet pressure of 20bar, outlet pressure of 10bar and 4bar Pressure drop

Connection	Pressure range [bar]	Type
G1/4"	0,5...12	PR16-14-0,5/12-MA
G1/4"	1...20	PR16-14-1/20-MA
G1/4"	2...35	PR16-14-2/35-MA
G1/4"	3...50	PR16-14-3/50-MA
G3/8"	0,5...12	PR16-38-0,5/12-MA
G3/8"	1...20	PR16-38-1/20-MA
G3/8"	2...35	PR16-38-2/35-MA
G3/8"	3...50	PR16-38-3/50-MA
G1/2"	0,5...12	PR16-12-0,5/12-MA
G1/2"	1...20	PR16-12-1/20-MA
G1/2"	2...35	PR16-12-2/35-MA
G1/2"	3...50	PR16-12-3/50-MA
G1"	0,5...12	PR16-10-0,5/12-MA
G1"	1...20	PR16-10-1/20-MA
G1"	2...35	PR16-10-2/35-MA
G1"	3...50	PR16-10-3/50-MA

Accessories

Designation	Type
Mounting bracket kit G1/4"-G1/2"	MMB16-14/38
Mounting bracket kit G1"	MMB16-12/10

Illustrations non-binding
Design, dimensional and material changes reserved

+43 512 52076
austria@stasto.eu
© STASTO Automation KG