Partnership. With Guarantee.

Steel ball valves with pneumatic rotary actuator Series BA078-...-D0B/D0-01



Design type	Actuator: piston actuator with 2 opposed pistons, elastic sealing, actuator in all details in accordance with ISO 5211 or according to NAMUR recommendations, End positions adjustable on both sides +/-5°
Connection	Weld ends DN10...DN100 according to DIN 3239
Materials Standard version	Actuator: Hard anodized aluminium, Pinion, nickel-plated steel, Piston guide POM, Seals NBR Ball valve: Steel housing, Ball stainless steel AISI 304, Ball seal made of graphite-reinforced PTFE, Stem seal made of graphite-reinforced PTFE, Spindle O-ring FKM, Compensation hole
Function	double-acting
Mounting type	Installation in rigid piping system
Mounting position	any
Control medium	filtered and lubricated or non-lubricated compressed air
Application range	Steam, other applications on request
Medium temperature	-10...+198°C
Ambient temperature	-10...+85°C
Control pressure	5,5...8bar, Adaptation to lower pilot pressures possible on request
Operating pressure	Vacuum max. 10^{-3} Torr up to 15bar
Special version	Stainless steel pinion, Ambient temperature -10...+150°C, ATEX II 2 G/D c T3 / II 2 G/D c T6 on request
Accessories	assembled manual, pneumatic or electric control valve electrical end position feedback, Positioner in I/P or P/P version Adjustment of the switching speed
Ordering note	When ordering, please also specify pilot pressure, operating medium, operating pressure and operating temperature.
Application note	The pressure and temperature specifications are maximum values for normal conditions, for lubricating or non-degreasing media. Degreasing media in particular reduce the specified values and increase the required torque. For these special cases, we recommend prior consultation. When selecting the valve, the lowest control pressure occurring in the system must be taken as the basis.

+43 512 52076
austria@stasto.eu
© STASTO Automation KG

Dimensions

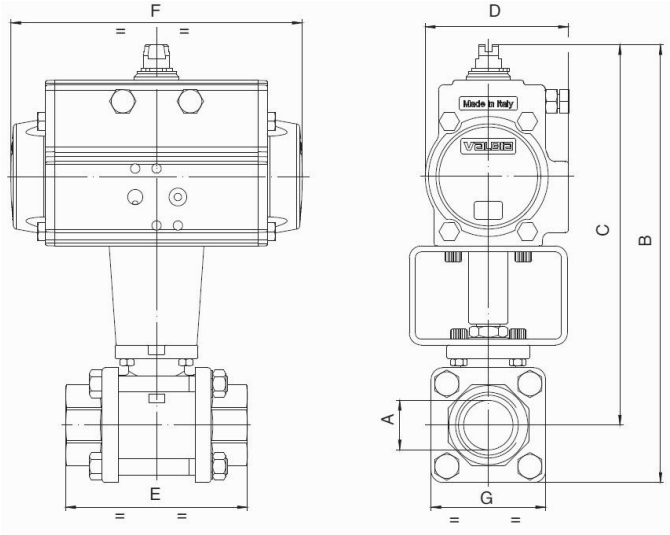

Ball valves with double-acting rotary actuator

DN [mm]	B	C	D	E	F	G	Actuator type	Kv value [m³/h]	Weight [approx. kg]	Type
10	164,5	147,5	71	57	141	33	PAD052	8,5	1,4	BA078-10-D0B
15	171,5	152,5	71	65	141	38	PAD052	19,2	1,6	BA078-15-D0B
20	240,5	217	94,5	76	210	47	PAD075	35	3,5	BA078-20-D0-01
25	233,5	204,5	80,5	92	164	58	PAD063	64,5	2,9	BA078-25-D0-01
32	259,5	226	94,5	106	210	67	PAD075	104	4,5	BA078-32-D0-01
40	284	246	94,5	116	210	76	PAD075	174	5,3	BA078-40-D0-01
50	312	267	106	136	240,5	90	PAD085	301	7,8	BA078-50-D0-01
65	360	293	123	153	275	134	PAD100	546	13,7	BA078-65-D0-01
80	384,5	304	123	180	275	161	PAD100	873	18,3	BA078-80-D0-01
100	470	375	137	217	333	190	PAD115	1363	30,5	BA078-100-D0-01

Illustrations non-binding
Design, dimensional and material changes reserved

+43 512 52076
austria@stasto.eu
© STASTO Automation KG