Partnership. With Guarantee.

2/2-Way coaxial valve - pilot-operated, DN100 Series CVFV-100



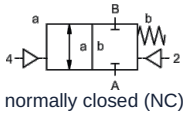

normally closed (NC)

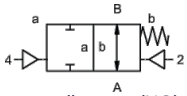

normally open (NO)

Type designation	CVFV-100, with pilot valve CVFV-P-100
Design type	2/2-way coaxial valve, pilot-operated, de-energized closed or de-energized open
Mode of operation	pressure-relieved, with spring return
Nominal size	DN 100mm
Connection	CVFV: Flanges PN16 or rather PN40, Special flanges on request
Pressure range	0...16bar or 0...40bar
Back pressure	P2 > P1, available (max. 16bar)
Materials	optionally body aluminium, zinc-plated steel, nickel-plated steel, non-ferrous metal-free or stainless steel Valve seat Plastic on metal, Sealing materials PTFE, NBR, FPM, CR, EPDM The material specifications of the versions refer exclusively to the valve connection parts in contact with the medium
Media	gaseous - liquid - contaminated - high-viscosity - gelatinous - paste-like
Flow direction	A → B, according to marking, (Special version alternating max. 16bar)
Mounting type	Installation in rigid piping system
Mounting position	any
Vacuum Leakage rate	< 10^{-6} mbar*l*s^{-1}
Kv value	140,0m³/h
Switching cycles	40/min.
Switching time	ON 300...3000ms, CLOSED 300...3000ms
Cushioning	ON/CLOSED: via throttling of the pilot valve
Medium temperature	with flanged pilot valve up to +60°C (Pilot valve outside the temperature range, medium temperature max. 160°C)
Ambient temperature	with flanged pilot valve up to +50°C
Manual emergency override	via pilot valve
Approvals	on request LR/GL/EN10204
Weight	CVFV 38,0kg
Options	Vacuum tests with certificate, Limit switch inductive (Normally closed (NC) PNP- Icomatic/Balluf), Limit switch inductive NAMUR (+ Switching amplifier), Limit switch mechanical (Changeover contact), Flushing ports, Leakage ports

+43 512 52076
austria@stasto.eu
© STASTO Automation KG

Voltage type	AC and DC voltage
Standard voltage	230V/40-60Hz, 24VDC, Permissible voltage fluctuation ±10%
Special voltages	on request
Power consumption	DC: 4,8W (2,5W on request), AC: Tightening torque 11,0VA, Holding force 8,5VA
Duty cycle	100% (Continuous operation)
Degree of protection	IP65 (IP54) according to DIN 40050 with correctly mounted device socket (protection against dust ingress and water jets)
Scope of delivery	incl. connector according to EN175301-803-Form B (formerly DIN43650) - Cable entry M16x1,5
optional	Device connector according to DESINA, connector to vdma
Additional equipment	Illuminated connector with varistor
Explosion protection	Eex m II T5, Power consumption 24VDC: 3,25W, 230VAC: 2,90W
Ordering information	Nominal size, Connection, Function NC/NO, Operating pressure, Flow rate, Medium, Medium temperature, Ambient temperature, Rated voltage, Rated voltage Limit switch, Actuation
Application note	The technical design of the valves is media- and application-specific, which may result in deviations from the general specifications stated in the data sheet with regard to version, sealing materials and characteristic values. In the event of inaccurate or incomplete ordering information or application data, there is a risk of incorrect technical sizing of the valves for the intended application purpose. This may result in the physical and/or chemical properties of the materials or seals used being insufficient for the intended application purpose.

Pneumatic actuation

Pilot pressure range	4...10bar
Air consumption	135cm³/Stroke
Switching speed	Main valve continuously adjustable via the pilot valve throttles
Control	preferably via 5/2-way pilot valve
Control ports	2/4: G1/4" (G3/8" on request)

Hydraulic actuation

Pilot pressure range	10...30bar/30...60bar
Control	preferably via 4/2-way pilot valve
Control ports	X/Y: G1/4" (NPT 1/4 on request)

© STASTO Automation KG

Dimensions

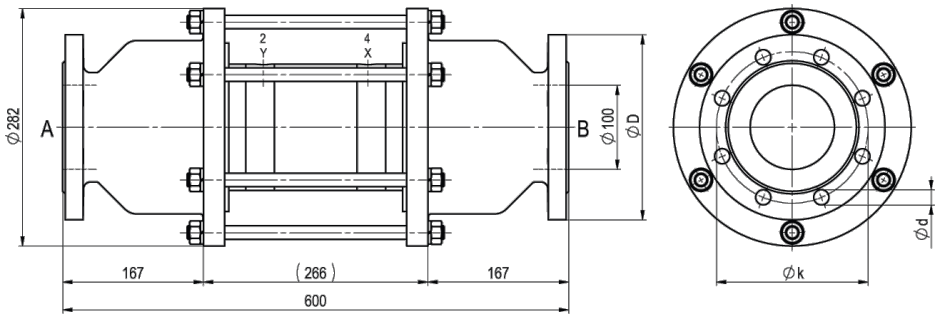

CVFV-100 Function NC

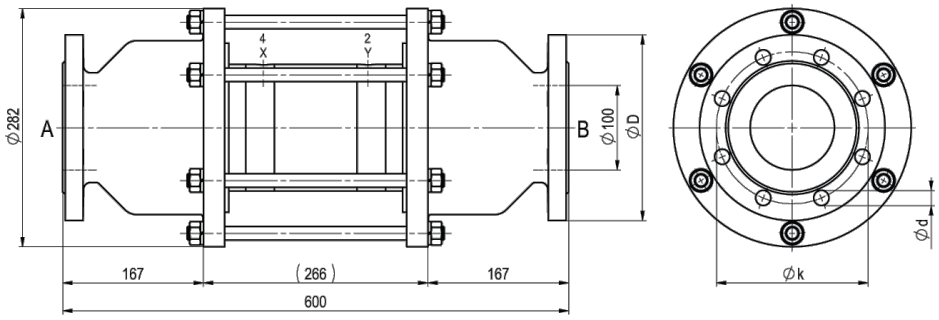

CVFV-100 Function NO

Flange PN	DIN	ØD	Øk	Ød
16	EN 1092-1	220	180	18
40	EN 1092-1	235	190	22

Pilot valves and electrical connections



Pilot valve
5/2-way valve co-ax, electropneumatic, G1/8,
p = 4...10bar



electrical connection
Solenoid coil M12x1



electrical connection
Form B connector DIN EN 175301-803

Limit switch



Icomatic Plastic version
M12x1, DC 10 - 60V
AC 15 - 250V
-25...+85°C



Balluff Metal version
M12x1, DC 10 - 30V
-25...+70°C



Honeywell
Changeover contact

Illustrations non-binding
Design, dimensional and material changes reserved

© STASTO Automation KG