Partnership. With Guarantee.

Poppet valve with electric actuator
Series SEC04, SE14



Design type	Poppet valve or rather Seat control valve with electric actuator, automatic overload protection and End position shut-off
Connection	G1/4"...G2" according to ISO228 on request: NPT thread, Weld ends, Tri-Clamp Connection
Materials	Body Red brass G1/2"...G2" Stainless steel housing 1.4408 G1/4"...G2" Standard seat seal PTFE
Application range	gaseous and liquid media (also slightly contaminated), that do not attack the materials used
Viscosity of the medium	max. 600mm²/s (600cSt)
Medium temperature	-30...+200°C
Ambient temperature	-10...+60°C
Operating pressure	Vacuum up to 0,001bar absolute, see table
Mounting type	Installation in rigid piping system
Mounting position	any, except hanging downward

Electrical data:

Voltage type	AC and DC voltage
Standard voltage	see table "Motor data"
Electrical Connection	via cable gland M20x1,5 or rather M12x1,5
End position shut-off	via internal electronics
Duty cycle	100% Duty cycle (continuous operation)
Degree of protection	IP65 according to EN 60529 with correctly installed cable entry (protection against dust ingress and splashing water)
Actuation	3-point control, (0)4...20mA or rather (0)2...10V
Special version	Control actuator with fail-safe position, 2-point control, other switching times
Accessories	Actuator heater, Limit switch, Position feedback, Feedback via potentiometer

+43 512 52076
austria@stasto.eu
© STASTO Automation KG

Kvs values [m^3/h Water]

Characteristic curve	linear					equal percentage						Open/Close
Nominal size DN [mm]	100%	40%	25%	15%	10%	100%	40%	25%	15%	10%	7,5%	
8	0,6	0,24	0,15	-	-	0,6	-	-	-	-	-	0,95
15	3,8	1,5	0,93	-	0,4	3	1,2	0,8	0,46	-	0,23	3,8
20	8,8	3,5	2,2	-	-	6	2,4	1,5	-	-	-	9
25	14	5,8	3,6	-	-	10	4	2,6	-	-	-	17
32	20	8	-	-	-	16	6	-	-	-	-	28
40	27	11	-	-	-	25	10	-	-	-	-	35
50	37	-	-	-	-	-	-	-	-	-	-	45

Type code

		Seat control valve SEC04 Poppet valve SE14	-	N	112	-	R	T	E04	-	01
Type											
Connection type	none specification, if female thread ISO228/1										
	Weld ends to DIN			D							
	Weld ends to ISO			I							
	NPT thread			N							
Connection	DN8-1/4", only with seat seal PEEK				14						
	DN15-1/2"				12						
	DN20-3/4"				34						
	DN25-1"				10						
	DN32-11/4"				114						
	DN40-11/2"				112						
	DN50-2"				20						
Materials	Red brass (DN15 - DN50)						R				
	Stainless steel 1.4408 (DN8 - DN50)						S				
Seat seal	EPDM							E			
	PEEK							P			
	NBR							N			
	PTFE							T			
	FKM							V			
Actuator	Control drive CA260C								EC6		
	Control drive CA24C								EC7		
	On-off actuator CA24								E04		
	On-off actuator CA260								E05		
Special version	described in the item text										01,02,03....

Dimensions

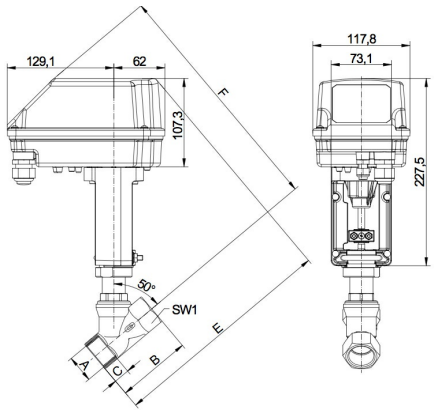

Connection A	Nominal size DN [mm]	max. Operating pressure [bar]			B	C	E	F	SW1	SW2	Stroke	Actuation time Open/Close [Seconds]	Weight [approx. kg]
		Body Red brass	Housing Stainless steel										
		On-off operation*	On-off operation	Normal operation									
G1/4"	8	-	40	16	60	12	258	306	20	30	8,5	26	2,3
G1/2"	15	16	40	16	65	15	263	310	25	30	9	27	2,4
G3/4"	20	16	20	16	75	16,3	270	310	31	30	14	32	2,6
G1"	25	12	12	12	90	19,1	275	314	39	30	18	54	2,8
G1"1/4	32	7	7	7	110	21,4	291	330	48	30	21	63	3,2
G1"1/2	40	4,8	4,8	4,8	120	21,1	295	334	55	30	22	66	3,5
G2"	50	2,8	2,8	2,8	150	25,7	311	341	68	32	22	66	4,1

*Angle seat valves with control cone only available with stainless steel body

Motor data

Function	Rated voltage	Setpoint input	Burden [Ω]	Position feedback	external burden [Ω]	Limit switch	max. Switching capacity	Power [W]	Actuation time [s/mm]	Actuator type
Open/Close	24V AC/DC	3-point	-	optional available	-	optional available	250V AC/DC 1A	13	3	CA24
Open/Close	90-260V AC	3-point	-	optional available	-	optional available	250V AC/DC 1A	12	3	CA260
Control	24V AC/DC	(0)4-20mA (0)2-10V*	500 95k	(0)4-20mA (0)2-10V*	500 >5k	2x	24V AC/DC 200mA	13	2	CA24C
Control	90-260V AC	(0)4-20mA (0)2-10V'	500 95k	(0)4-20mA (0)2-10V*	500 >5k	2x	24V AC/DC 200mA	12	2	CA260C
*(0)2-10V (Switching via a switch on the PCB)										

Electrical connection

On-off actuators

Actuator CA24	Actuator CA260
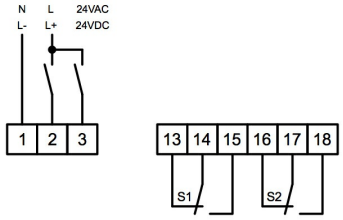	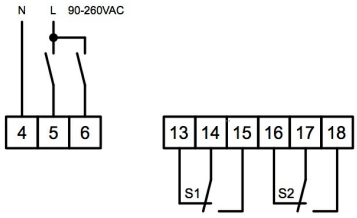

Control drives

Actuator CA24C	Actuator CA260C
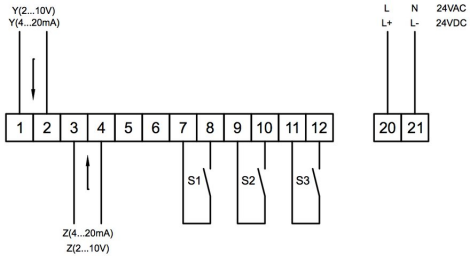	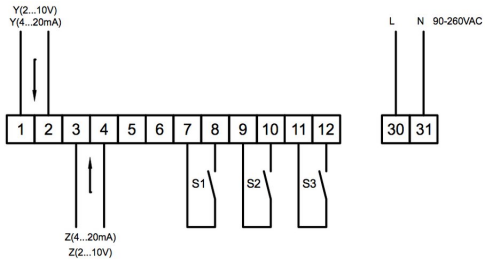

Position	Description	Note
S1	Bottom limit switch	Standard for control actuators - optional for open-close actuators
S2	Top limit switch	Standard for control actuators - optional for open-close actuators
S3	Fault message	Standard for control actuators - max. 0,2A/24V AC/DC
Y	Setpoint input	Standard 4-20mA 2-10V (Switching via a switch on the PCB)
Z	Position feedback	Standard 4-20mA 2-10V (Switching via a switch on the PCB)

Illustrations non-binding
Design, dimensional and material changes reserved

+43 512 52076
austria@stasto.eu
© STASTO Automation KG