Partnership. With Guarantee.

Three-way flanged ball valves made of steel
With pneumatic rotary actuator
Series BAUA-...-CITV (T-bore)
Series BAMA-...-CITV (L-bore)



Design type	Ball valve: reduced passage, double-sealed, non-overlapping, Pressure inlet front only Actuator: piston actuator with 2 opposed pistons, elastic sealing, actuator in all details in accordance with ISO 5211 or according to NAMUR recommendations, End positions adjustable on both sides +/-5°
Connection	Flanges DN15...DN100 according to EN1092-1
Materials Standard version	Actuator: Hard anodized aluminium, Pinion, nickel-plated steel, Piston guide POM, Seals NBR Ball valve: Housing steel 1.0432, Ball Stainless steel AISI 304, Ball seal made of PTFE, Spindle seal PTFE/FKM
Function	available in double-acting or single-acting version
Mounting type	Installation in rigid piping system
Mounting position	any
Control medium	filtered and lubricated or non-lubricated compressed air
Application range	gaseous and liquid media that do not attack the materials used
Medium temperature	-10...+160°C
Ambient temperature	-20...+85°C
Control pressure	5,5...8bar, Adaptation to lower pilot pressures possible on request
Operating pressure	0bar up to Operating pressure according to table and pressure-temperature diagram, suitable for rough vacuum
Special version	Ball valve: ATEX EX II 2G Ex h IIC T6...T1 Gb / II 2D Ex h IIIC T85°C...T450°C Db, Actuator: ATEX II 2G Ex h IIC T6...T3 Gb / II 2D Ex h IIIC T85°C...T200°C Db Stainless steel pinion, Ambient temperatures -40...+85°C, or rather -20...+150°C
Accessories	assembled manual, pneumatic or electric control valve electrical end position feedback, Positioner in I/P or P/P version Adjustment of the switching speed
Ordering note	Please also specify switching type, control pressure, operating medium, operating pressure and operating temperature when ordering.
Application note	The pressure and temperature specifications are maximum values for normal conditions, for lubricating or non-degreasing media. Degreasing media in particular reduce the specified values and increase the required torque. For these special cases, we recommend prior consultation. When selecting the valve, the lowest control pressure occurring in the system must be taken as the basis.

+43 512 52076
austria@stasto.eu
© STASTO Automation KG

Dimensions

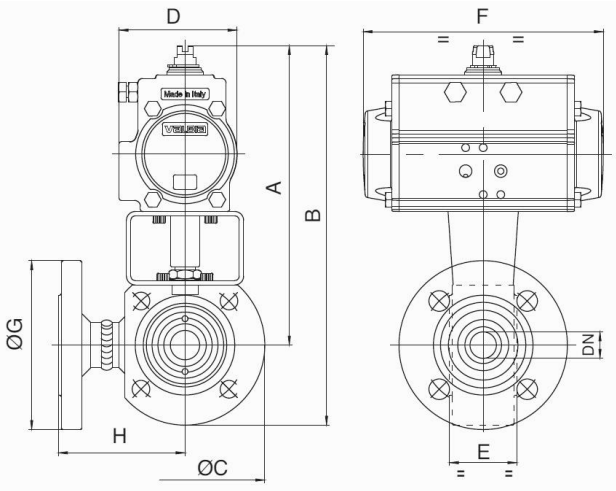

Ball valves with double-acting rotary actuator

Nominal size DN[mm]	max. operating pressure [bar] up to 85°C	A	B	C	D	E	F	G	H	Actuator type	Kv value [m³/h]	Weight [approx. kg]	Type T-bore	Type L-bore
15	16	147	191	89	45	40	110	95	76	PAD032	2,8	3,2	BAUA-015-CITV-D0	BAMA-015-CITV-D0
15	16	184	228	89	71	40	141	95	76	PAD052	2,8	3,8	BAUA-015-CITV-D0B*	BAMA-015-CITV-D0B*
20	16	189	239	99	71	40	141	105	82	PAD052	5,2	4,5	BAUA-020-CITV-D0	BAMA-020-CITV-D0
25	16	193	248	109	71	46	141	115	86	PAD052	9,2	5,5	BAUA-025-CITV-D0	BAMA-025-CITV-D0
32	16	200	265	130	71	58	141	140	100	PAD052	14,4	6,8	BAUA-032-CITV-D0	BAMA-032-CITV-D0
40	16	227	297	140	81	71	164	150	105	PAD063	25,9	10,8	BAUA-040-CITV-D0	BAMA-040-CITV-D0
50	16	251	331	160	95	82	210	165	115	PAD075	40,4	15,8	BAUA-050-CITV-D0	BAMA-050-CITV-D0
65	16	282	372	180	106	106	241	185	125	PAD085	63,2	23,7	BAUA-060-CITV-D0	BAMA-065-CITV-D0
80	16	290	390	200	106	122	241	200	150	PAD085	115,8	29,0	BAUA-080-CITV-D0	BAMA-080-CITV-D0
100	16	340	450	220	123	152	275	220	159	PAD100	163,2	44,6	BAUA-100-CITV-D0	BAMA-100-CITV-D0

*With the suffix B, the ball valves are equipped with the PAD052 actuator. When using limit switch boxes and NAMUR control valves, B types must be used.

Ball valves with single-acting rotary actuator

Nominal size DN[mm]	max. operating pressure [bar] up to 85°C	A	B	C	D	E	F	G	H	Actuator type	Kv value [m³/h]	Weight [approx. kg]	Type T-bore	Type L-bore
15	16	183	228	89	71	40	141	95	76	PAS0525	2,8	4,0	BAUA-015-CITV-S0	BAMA-015-CITV-S0
20	16	199	249	99	81	40	164	105	82	PAS0635	5,2	5,3	BAUA-020-CITV-S0	BAMA-020-CITV-S0
25	16	204	259	109	81	46	164	115	86	PAS0635	9,2	6,3	BAUA-025-CITV-S0	BAMA-025-CITV-S0
32	16	212	277	130	81	58	164	140	100	PAS0635	14,4	8,7	BAUA-032-CITV-S0	BAMA-032-CITV-S0
40	16	259	329	140	106	71	241	150	105	PAS0855	25,9	14,0	BAUA-040-CITV-S0	BAMA-040-CITV-S0
50	16	278	358	160	123	82	275	165	115	PAS1005	40,4	20,0	BAUA-050-CITV-S0	BAMA-050-CITV-S0
65	16	349	439	180	137	106	333	185	125	PAS1155	63,2	33,7	BAUA-065-CITV-S0	BAMA-065-CITV-S0
80	16	370	470	200	148	122	372	200	150	PAS1255	115,8	39,0	BAUA-080-CITV-S0	BAMA-080-CITV-S0
100	16	387	497	220	148	152	372	220	159	PAS1255	163,2	53,1	BAUA-100-CITV-S0	BAMA-100-CITV-S0

Single-acting actuators are supplied spring-closing (NC) unless otherwise ordered.

Circuit diagram

BAUA		BAMA
Switching type 01	Switching type 04	Switching type 05
Position 1		
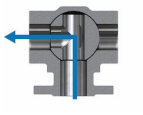		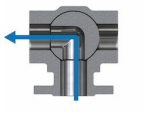
Position 2		
	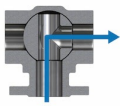	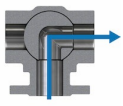

Pressure-temperature diagram

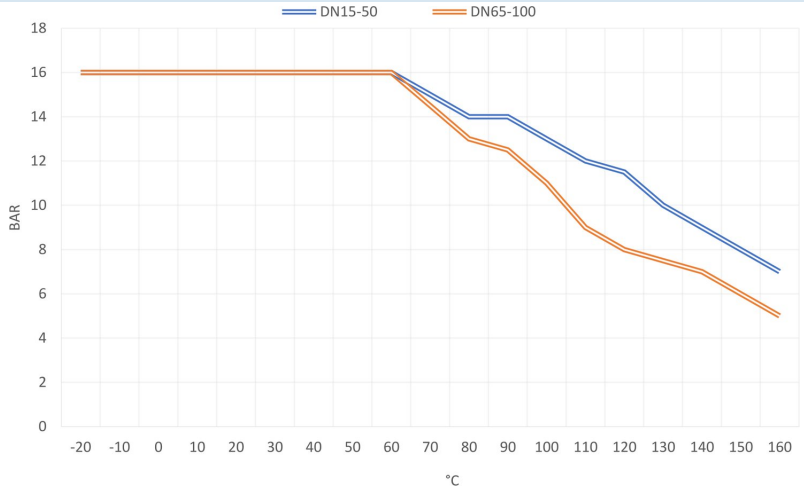

Illustrations non-binding
Design, dimensional and material changes reserved