Partnership. With Guarantee.

Maintenance unit G1/4" and G3/8" Series MU303



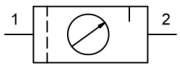

Design type	Diaphragm pressure regulator with secondary venting, Centrifugal force principle filter, Sintered filter element, semi-automatic drain valve, Proportional lubricator
Connection	G1/4" and G3/8" according to ISO228/1
Materials	Housing Zinc die casting, Oil and condensate reservoir Polycarbonate or Metal, Seals NBR, Knob POM
Function	Secondary pressure regulation
Locking mechanism	Pressure setting can be locked by pressing in the rotary knob
Filter element	5µm
Mounting type	Installation in piping system, Locknut or Wall mounting using mounting bracket
Mounting position	vertical, Drain screw bottom
Medium	Compressed air
Oil recommendation	HP32A (Temperature range 0...50°C), NR32 (Temperature range -35...85°C)
Medium temperature	with plastic bowl 0...+60°C, with metal bowl 0...+60°C (with appropriately conditioned compressed air -10...+60°C)
Ambient temperature	with plastic bowl 0...+60°C, with metal bowl -10...+60°C
Inlet pressure	maximum 16bar, with automatic drain valve 1,5...16bar
Control ranges	0,5...10bar (0,1...3bar / 0,2...6bar / 0,5...16bar on request)
Flow direction	is marked by an arrow
Scope of delivery	including pressure gauge

+43 512 52076
austria@stasto.eu
© STASTO Automation KG

Order code

		MU303 - 14 H - 0,1/3 - P - A
	1/4"	14
Connection	3/8"	38
Flow rate	Standard (Leave blank)	
	high flow rate	H
Pressure range	0,1...3bar	0,1/3
	0,2...6bar	0,2/6
	0,5...10bar	0,5/10
	0,5...16bar	0,5/16
Reservoir	Plastic reservoir (Leave blank)	
	Plastic reservoir with protective cage	P
	Metal container	M
Drain valve	semi-automatic drain valve (Leave blank)	
	automatic drain valve	A

Dimensional drawing, Characteristics

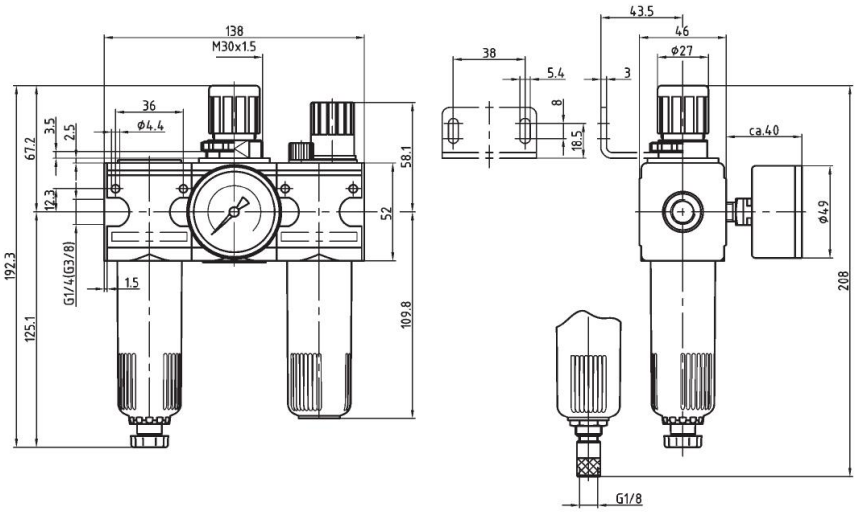

semi-automatic drain valve

automatic drain valve

Connection	Flow rate at 6 bar* [Nl/min]	max. Inlet pressure [bar]	Pressure range [bar]	Type
G1/4"	1100	16	0,5...10	MU303-14H-0,5/10
G1/4"	1100	16	0,5...10	MU303-14H-0,5/10-P
G1/4"	1100	16	0,5...10	MU303-14H-0,5/10-M
G3/8"	1100	16	0,5...10	MU303-38-0,5/10
G3/8"	1100	16	0,5...10	MU303-38-0,5/10-P
G3/8"	1100	16	0,5...10	MU303-38-0,5/10-M

*Flow rate data at inlet pressure of 8bar, outlet pressure of 6bar and 1bar Pressure drop

© STASTO Automation KG

Flow diagram, Oiler response threshold

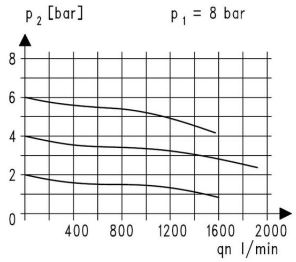

Flow diagram

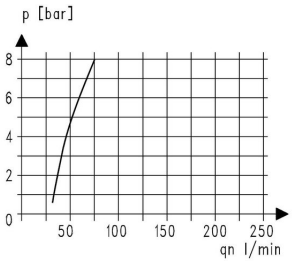

Oiler response threshold

Accessories

Designation	Type
Locknut M30x1,5	MPN03-18/38
Holding angle with nut M30x1,5	MMP03-18/38
Holding angle with 2 screws	MMB03-14H/38

Illustrations non-binding
Design, dimensional and material changes reserved

+43 512 52076
austria@stasto.eu
© STASTO Automation KG